Cambridge Assessment International Education

Cambridge International AS & A Level

CANDIDATE NAME	

CENTRE NUMBER						CANDIDATE NUMBER				

4526355485

PHYSICS **9702/33**

Paper 3 Advanced Practical Skills 1 **February/March 2024**

2 hours

You must answer on the question paper.

You will need: The materials and apparatus listed in the confidential instructions

INSTRUCTIONS

- Answer **all** questions.
- Use a black or dark blue pen. You may use an HB pencil for any diagrams or graphs.
- Write your name, centre number and candidate number in the boxes at the top of the page.
- Write your answer to each question in the space provided.
- Do **not** use an erasable pen or correction fluid.
- Do **not** write on any bar codes.
- You will be allowed to work with the apparatus for a maximum of 1 hour for each question.
- You should record all your observations in the spaces provided in the question paper as soon as these observations are made.
- You may use a calculator.
- You should show all your working and use appropriate units.

INFORMATION

- The total mark for this paper is 40.
- The number of marks for each question or part question is shown in brackets [ ].

For Examiner's Use	
1	
2	
Total	

This document has **12** pages.

© UCLES 2024

You may not need to use all of the materials provided.

1 In this experiment, you will investigate the properties of a pendulum.

(a) (i)

- Assemble the apparatus as shown in Fig. 1.1 and Fig. 1.2.
- Push the nail through the central hole in the pendulum and then into the plastic tube.
- Secure the tube and nail in the boss, as shown in Fig. 1.1.

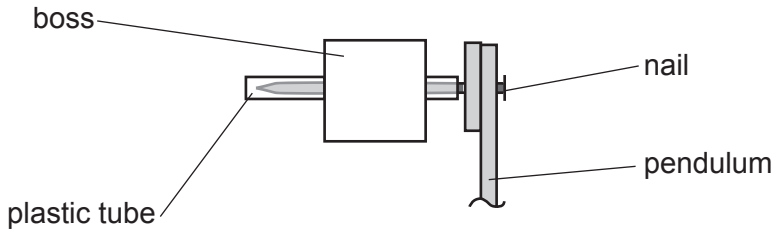

Fig. 1.1

- Ensure that the pendulum swings freely on the nail.

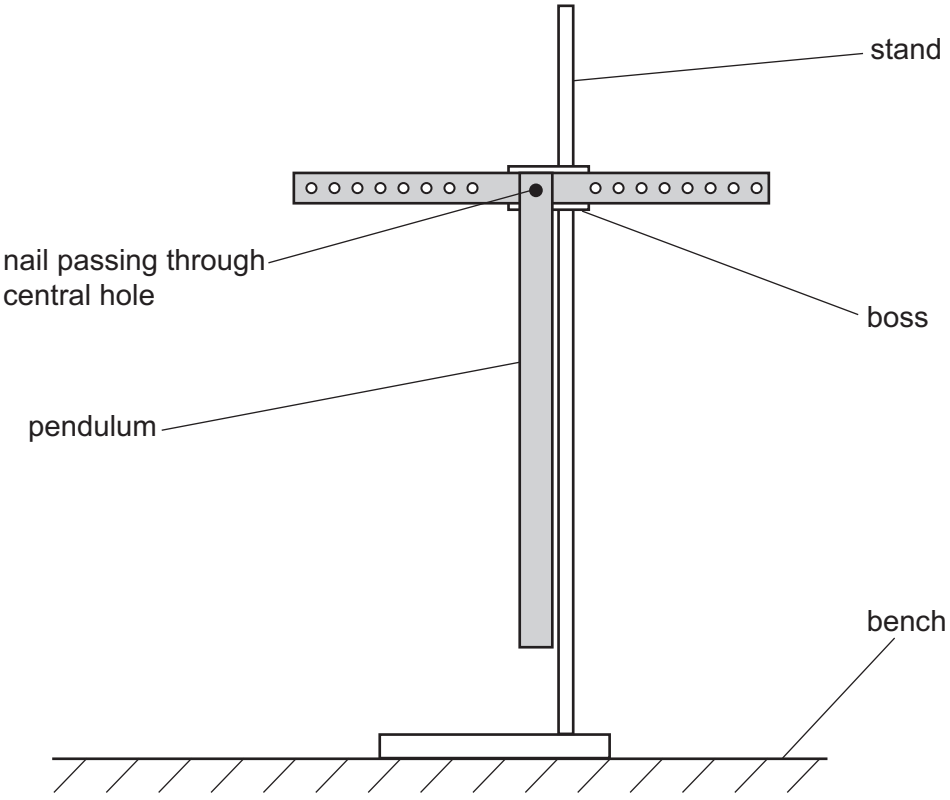

Fig. 1.2

© UCLES 2024

- Attach two 50g slotted masses to the pendulum using the bolts and nuts. Use two holes which are the **same distance** *x* from the nail, as shown in Fig. 1.3.

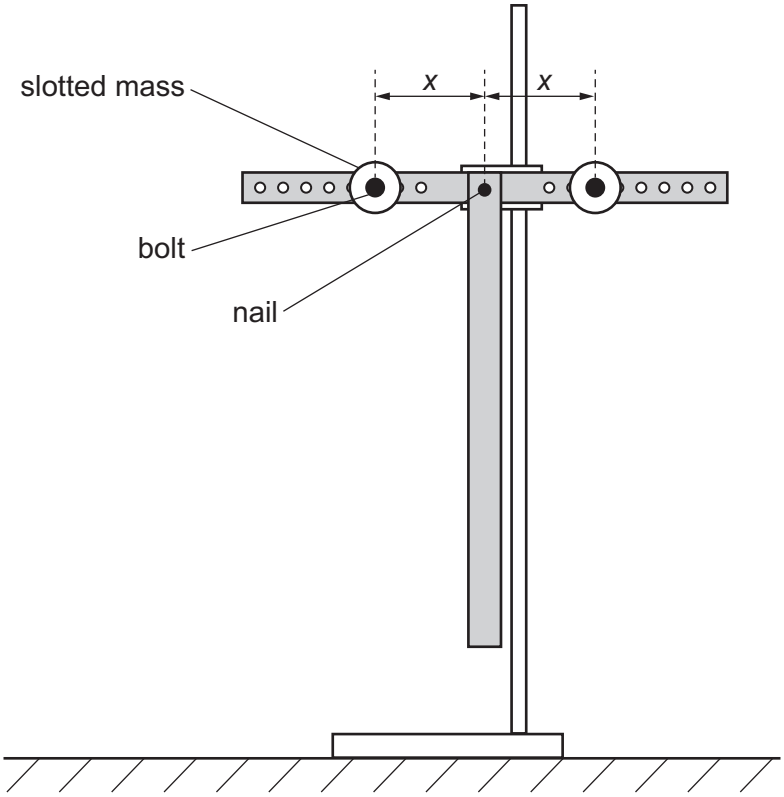

Fig. 1.3

- The distance from the centre of each bolt to the nail is *x*.
- Measure and record *x*.

x = ... [1]

(ii) Push the bottom of the pendulum a short distance to one side and then release it.

Take measurements to determine the period *T* of the oscillations.

T = ... [2]

(b) Vary x by using different holes and measure T.

Repeat until you have six sets of values of x and T.

Record your results in a table. Include values of $\sqrt{x^3}$ in your table.

[9]

(c) **(i)** Plot a graph of T on the y-axis against $\sqrt{x^3}$ on the x-axis. [3]

(ii) Draw the straight line of best fit. [1]

(iii) Determine the gradient and y-intercept of this line.

gradient = ...

y-intercept = ...

[2]

© UCLES 2024

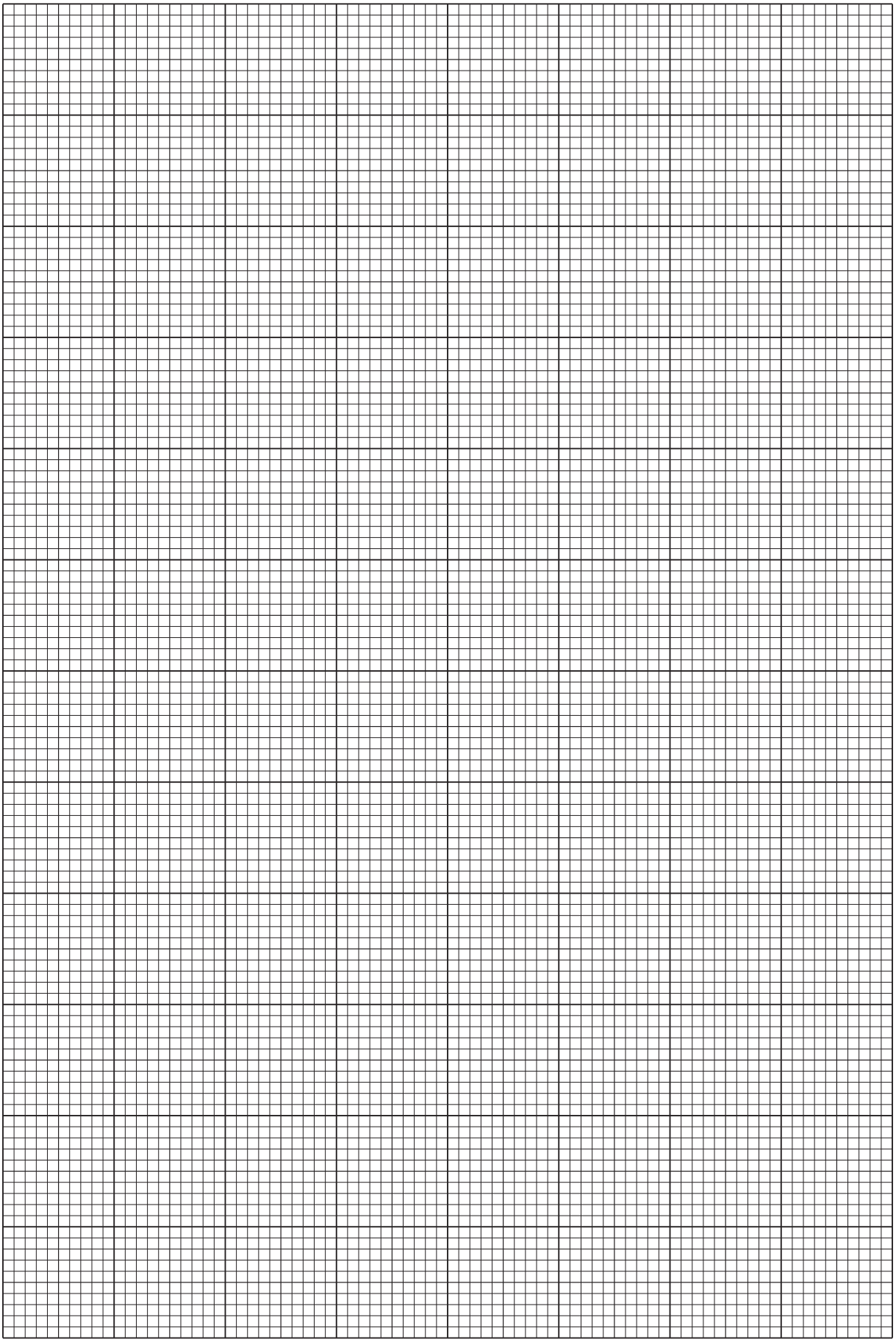

© UCLES 2024

[Turn over

(d) It is suggested that the quantities T and x are related by the equation

$$T = a\sqrt{x^3} + b$$

where a and b are constants.

Using your answers in **(c)(iii)**, determine the values of a and b.
Give appropriate units.

a = ...

b = ...
[2]

[Total: 20]

© UCLES 2024

You may not need to use all of the materials provided.

2 In this experiment, you will investigate the frictional forces on a wooden strip.

(a) (i) • You have been provided with two wooden strips. Select the **thicker** strip.

Measure and record its length L.

L = ... cm

• Attach the slotted mass to one of the wider faces of the strip approximately 10 cm from one end using a small piece of adhesive putty, as shown in Fig. 2.1.

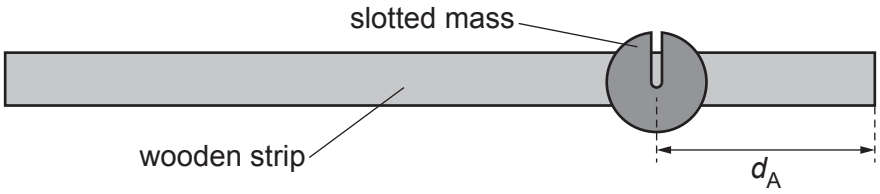

Fig. 2.1

• The distance from the centre of the slotted mass to the nearest end of the strip is d_A, as shown in Fig. 2.1.

Measure and record d_A.

d_A = ... cm
[2]

(ii) You have been provided with a smooth board. Support the board vertically on the bench using the stand, boss and clamp, as shown in Fig. 2.2.

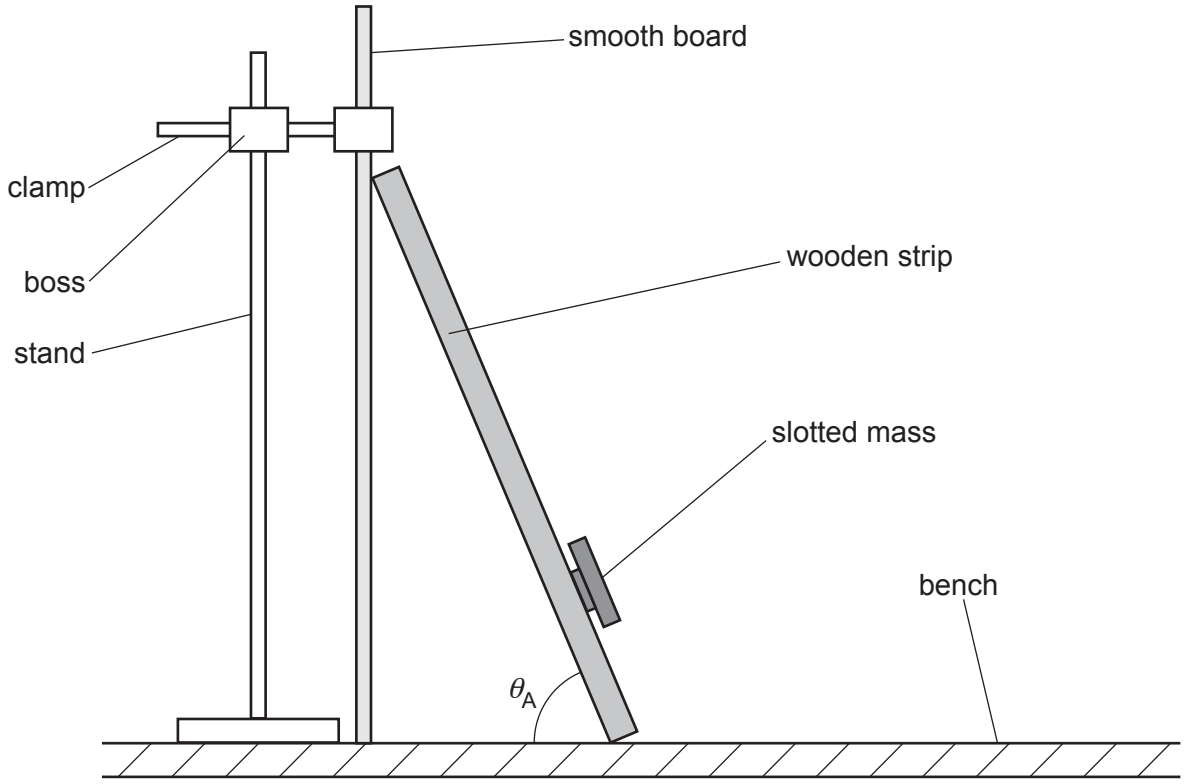

Fig. 2.2

- Lean the strip against the smooth board with the slotted mass nearer the lower end, as shown in Fig. 2.2.

- Move the bottom of the strip away from the smooth board until the strip starts to slip. Gradually push the bottom of the strip back towards the board until it **just** stays in position by itself.

- The angle between the strip and the bench is θ_A, as shown in Fig. 2.2.

  Measure and record θ_A.

θ_A = ...° [2]

(iii) Estimate the percentage uncertainty in your value of θ_A.
Show your working.

percentage uncertainty = ...% [1]

(iv) The mass of the thicker strip is M. The value of M is written on the strip.

- Record M.

M = ... g

- Calculate F_A using

$$F_A = \frac{\frac{M}{2} + \frac{Sd_A}{L}}{(M + S)\tan\theta_A}$$

where S is 100 g.

F_A = ... [1]

(v) • Invert the thicker strip and lean it against the smooth board so that the slotted mass is nearer the upper end as shown in Fig. 2.3.

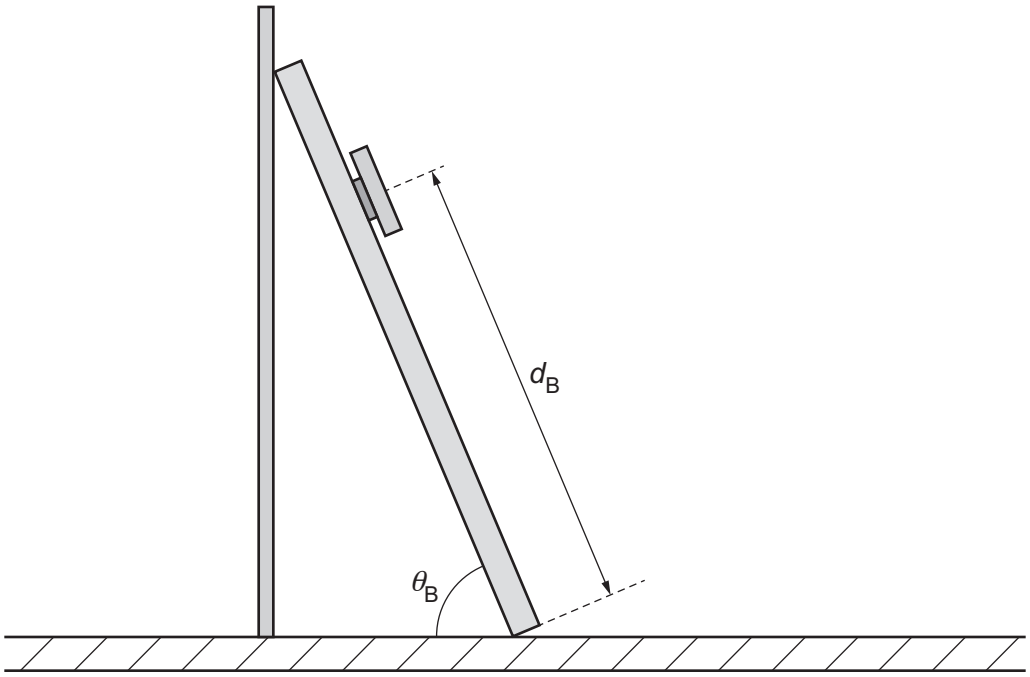

Fig. 2.3

• The distance from the centre of the slotted mass to the lower end of the strip is d_B.

Measure and record d_B.

d_B = ... cm

• Move the bottom of the strip away from the smooth board until the strip starts to slip. Gradually push the bottom of the strip back towards the board until it **just** stays in position by itself.

• The angle between the strip and the bench is θ_B, as shown in Fig. 2.3.

Measure and record θ_B.

θ_B = ... °

• Calculate F_B, using

$$F_B = \frac{\frac{M}{2} + \frac{Sd_B}{L}}{(M+S)\tan\theta_B}.$$

F_B = ...
[1]

(b) Repeat **(a)(i)**, **(a)(ii)**, **(a)(iv)** and **(a)(v)** using the **thinner** wooden strip.

L = ... cm

d_A = ... cm

θ_A = ... °

M = ... g

F_A = ...

d_B = ... cm

θ_B = ... °

F_B = ...
[3]

© UCLES 2024

(c) It is suggested that the relationship between F_A and F_B is

$$k = \frac{F_A}{F_B}$$

where k is a constant.

Using your data, calculate two values of k.

first value of k = ...

second value of k = ...
[1]

(d) It is suggested that the percentage uncertainty in the values of k is 15%.

Using this uncertainty, explain whether your results support the relationship in **(c)**.

.....

.....

.....

..... [1]

(e) (i) Describe **four** sources of uncertainty or limitations of the procedure for this experiment.

For any uncertainties in measurement that you describe, you should state the quantity being measured and a reason for the uncertainty.

1 .....

.....

2 .....

.....

3 .....

.....

4 .....

.....

[4]

(ii) Describe **four** improvements that could be made to this experiment. You may suggest the use of other apparatus or different procedures.

1 .....

.....

2 .....

.....

3 .....

.....

4 .....

.....

[4]

[Total: 20]

Permission to reproduce items where third-party owned material protected by copyright is included has been sought and cleared where possible. Every reasonable effort has been made by the publisher (UCLES) to trace copyright holders, but if any items requiring clearance have unwittingly been included, the publisher will be pleased to make amends at the earliest possible opportunity.

To avoid the issue of disclosure of answer-related information to candidates, all copyright acknowledgements are reproduced online in the Cambridge Assessment International Education Copyright Acknowledgements Booklet. This is produced for each series of examinations and is freely available to download at www.cambridgeinternational.org after the live examination series.

Cambridge Assessment International Education is part of Cambridge Assessment. Cambridge Assessment is the brand name of the University of Cambridge Local Examinations Syndicate (UCLES), which is a department of the University of Cambridge.